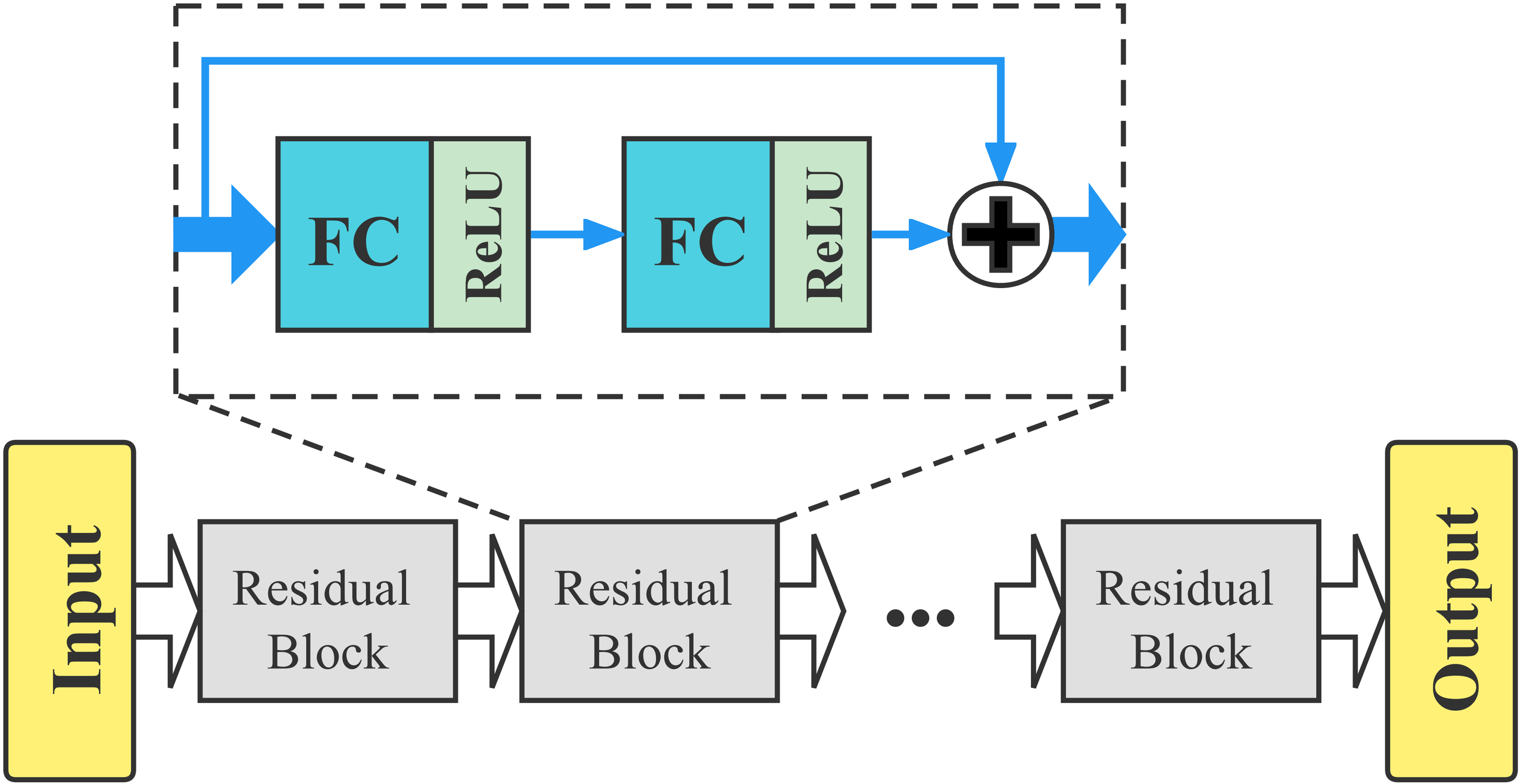
FC
ReLU
FC
ReLU
Input
Residual Block
Residual Block
...
Residual Block
Output